LIGHTING

User's manual:
product code: 991251

# INDEX

INTRODUCTION..... page 2

SAFETY PRECAUTIONS..... page 3

TECHNICAL FEATURES..... page 4

ASSEMBLING..... page 6

- 4-LEAF BARNDOORS..... page 6

CONNECTION TO THE POWER SUPPLY..... page 7

MOUNTING AND REPLACING THE LAMP..... page 8

DMX SIGNAL CONNECTION..... page 9

CONFIGURATION AND CONTROL..... page 10

PROGRAMMING FUNCTIONS..... page 11

USING DOWNTOWN COLORS 1800 IN DMX (5 CHANNELS)..... page 16

TROUBLESHOOTING..... page 17

- TABLE 1 - GENERAL PROBLEMS..... page 17
- TABLE 2 - PROBLEMS TO THE CONNECTION DATA LINK..... page 18
- ELECTRICAL DIAGRAM..... page 20

MAINTENANCE..... page 21

APPENDIX “A” - 5 CHANNELS CONFIGURATION..... page 21

# DOWNTOWN COLORS 1800

# INTRODUCTION

We thank you for choosing the DOWNTOWN COLORS 1800.

Characterized by an attracting design and an incredible optic system, together with an uniform colors mixing, the DOWNTOWN COLORS 1800 is suitable for any kind of outdoor ambient.

A modern and reliable electric circuit gives stability and functioning safety for long time.

To make the most of this unit and to make it work correctly in the years, before connecting it to its source and using it, we suggest you to carefully read this manual.

In this way you could be more familiar with its commands and connections so to easily use it.

All the sections of this manual have been studied to make as easy and complete as possible the use of the DOWNTOWN COLORS 1800.

To make the manual more clear and easy to consult, we have used the following symbols and conventions:

⚠ **IMPORTANT** very important warnings, to be read with the maximum attention;

**!** important parts of the text that give details and/or explanations on the use of the DOWNTOWN COLORS 1800;

practical advices for an efficient use of the DOWNTOWN COLORS 1800.

**The safety of the unit is guaranteed only strictly following the instructions, so it is recommended to accurately preserve them.**

# SAFETY PRECAUTIONS

## ⚠ IMPORTANT

**READ ALL CAUTIONS AND WARNINGS PRIOR TO OPERATE THIS EQUIPMENT.**
**INSTRUCTIONS TO PREVENT INJURIES OR DAMAGES DUE TO FIRE, ELECTRIC SHOCKS, MECHANICAL HAZARDS AND UV RADIATIONS HAZARDS.**

### •PROTECTION AGAINST FIRE

1) This unit has been made to work only with the Lamp:
**HMD 1800W / MHN-SA 1800 (PHILIPS).**

**! ABSOLUTELY NEVER USE OTHER KIND OF LAMPS.**

2) Keep a minimum distance of 0,5 mt. from walls or any inflammable surface.

3) Keep a minimum distance of 5 mt. from lighted objects.

4) Do not install the projector close to heat sources. Do not lay the connection cables on the projector when it is hot.

### •PROTECTION AGAINST ELECTRIC SHOCKS

1) This projector must be earthed.

2) Class I equipment. The protection conductor must be part of the power supply cable.

3) For the connection to the main power supply proceed as in fig. 3/a, page 7.

4) Disconnect the power supply before the Lamp replacement or before opening the unit.

5) Do not install the projector outdoors, exposed to rain or moisture.

### •PROTECTION AGAINST MECHANICAL HAZARDS

1) To avoid explosion risks, open the projector only after 15 minutes after the lamp is off.

2) The temperature of the projector can reach 100°C. Wait for almost 15 minutes before operating on it.

3) Replace the Lamp if it is damaged or deformed by the heat.

### •PROTECTION AGAINST UV RADIATIONS HAZARDS

1) Do not start on the projector without the protecting screen or if the dichroic filters are damaged.

2) The protecting screen and the dichroic filters must be replaced if visibly damaged and if their efficiency has been reduced, for example by slits or deep cuts.

3) Do not directly look at the Lamp when it is on.

### •WARNINGS

1) Do not dismantle and modify the unit.

2) To avoid any inflammable liquids, water or metal objects entering the unit.

3) Do not install the projector in places subject to vibration and large shocks.

## YOUR REFERENCE

Cite the model and the serial number on the identification label (fig. 3, page 7) anytime you contact your retailer to ask for information or assistance.

## STANDARD PACKAGE

The standard package of the DOWNTOWN COLORS 1800 contains:

1) Projector
2) Industrial socket 220V 16A (IP 44)
3) DMX XLR5 signal connectors (pc. 2)
4) User's manual
5) Guarantee

**ON REQUEST:**
* Lamp (code 063565)
* 4 Leaf barndoors (code 040104)
* Flight Case with wheels (code 194981)

## ⚠ IMPORTANT

**Make sure that the unit has not been damaged during the transportation.**
**In case it has happened or in case the unit does not work correctly, immediately contact the Retailer.**
**If the unit has been directly sent to you , immediately contact the Freight Company.**
**Only the final receiver (the person or the Company that receive the unit) is in the position to complain for the above inconveniences.**

# TECHNICAL FEATURES

| | |
|---|---|
| **LAMP** | Discharge lamp HMD 1800W / MHN-SA 1800W (PHILIPS)<br>Colour temperature: 5.600° K |
| **MOVEMENT** | 4 Stepper motors<br>Thanks to a sophisticated system of micro-steps of the stepper motors, the movement is extremely linear and accurate. |
| **VERTICAL MOVEMENT** | + 90° / - 10°<br>Manual orientation ( fig. 1, page 5). |
| **COLOURS** | Three-colour printing CYM (Cyan, Yellow, Magenta) + WHITE. |
| **BLACKOUT/ DIMMER** | The SHUTTER can be used as a DIMMER too. |
| **CONTROL SIGNAL** | • DMX 512 signal control (5 channels).<br>• Automatic mode (MASTER and SLAVE functions with inner programmed scenes). |
| **LIGHT BEAM AMPLITUDE** | 43.6° x 36.9° (fig. 1/a, page 5). |
| **INPUT POWER** | • Nominal operating voltage: 230 Vac; 50 Hz. (60 Hz on request)<br>• Rated power supply: 2000 W.<br>• Nominal current: 9,5 A (230 Vac). |
| **WORKING POSITION** | Standing on suitable surface. |
| **DIMENSIONS (W x D x H)** | mm. 680 x 380 x 730 (Fig. 1, page 5). |
| **WEIGHT** | Kg. 61 |
| **BODY** | Galvanised steel. Epoxy paint finish.<br>Degree of protection: IP 44 |
| **REFERENCE NORMS** | CE Norms |

fig. 1

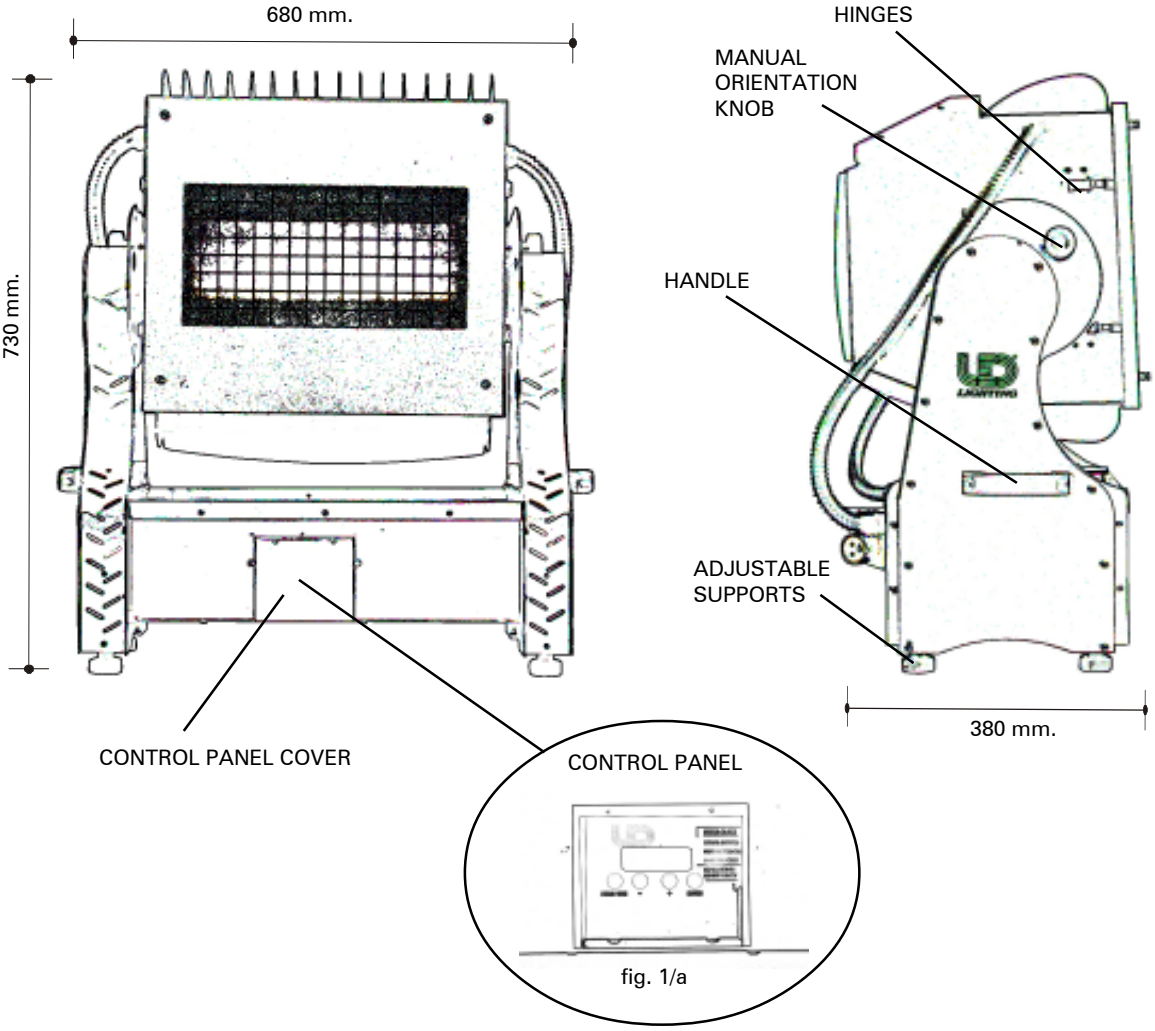


## LIGHT BEAM AMPLITUDE

fig. 1/b

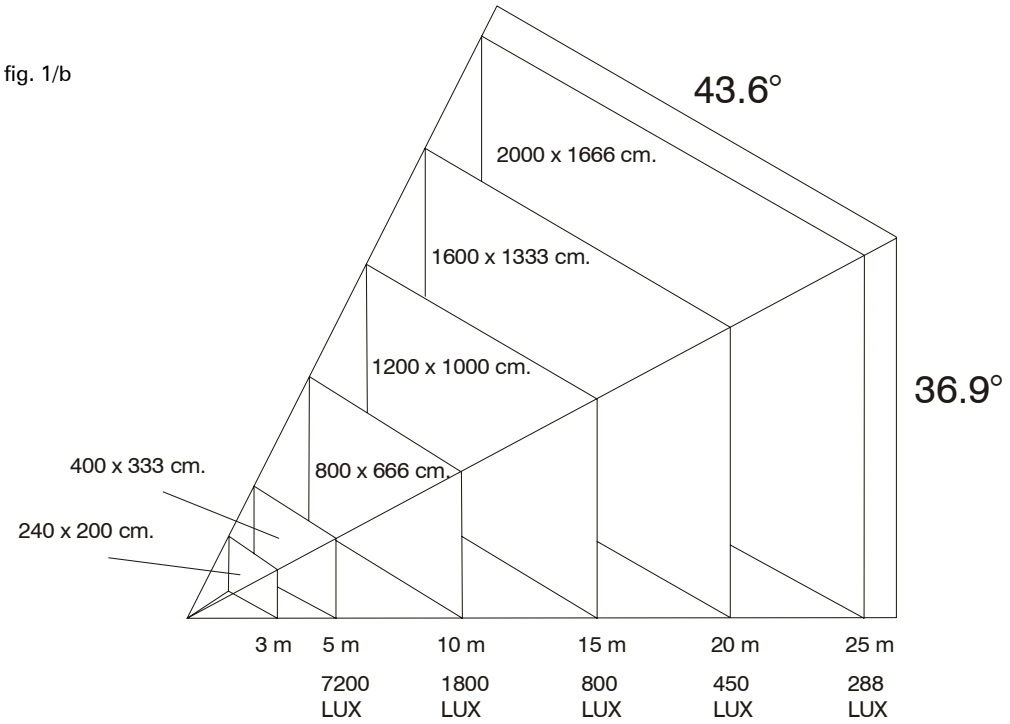

# ASSEMBLING

! Before installing the DOWNTOWN COLORS 1800, make sure that the carrying structure is safe and able to support the weight of the unit.

To orientate the unit, follow these instructions:
1) Unscrew the two knobs placed at both sides of the unit (fig. 1, page 5);
2) Orientate the unit in the preferred position; it is possible to orientate it referring to the picture of orientation degrees placed on one side of the unit;
3) Screw the above mentioned knobs.

The DOWNTOWN COLORS 1800 is equipped with 4 manual adjustable supports to level the unit (fig. 1, page 5).

! Make sure that the unit is correctly fixed and stable.

! Do not install the unit in places exposed to excessive moisture.

! Avoid installing the projector close to heat sources or in places subjected to large vibrations.

! The unit must be at a minimum distance of 50 cm. from the walls or from any inflammable material and 5 mt. from lighted objects.

! The unit must be placed where it could be easily aerated. To avoid obstructing the in/out air gratings.

## 4 LEAF BARNDOORS

Assemble the 4 leaf barndoors placed on the rear side of the projector, inserting them in the apposite support hooks, activating the two locking devices (fig. 2).

fig. 2

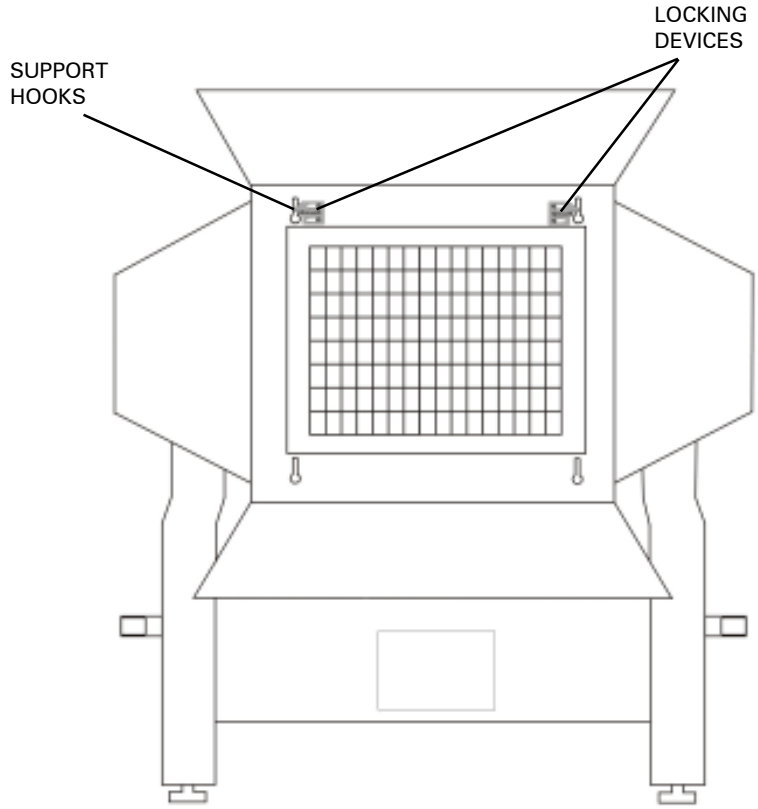

# CONNECTION TO THE POWER SUPPLY

fig. 3

| | | | |
|---|---|---|---|
| S.R.L. | | ITALY | cod. 991251 |
| TYPE | DOWNTOWN COLORS 1800 | | |
| Volt | 230 | Hz | 50 |
| Watt | 2200 | Amp. | 9,5 |
| Socket | SPECIAL | Lamps | MHN-SA 1800 |
| Weight | 61 | Max. Temp. | 100°C |
| Serial No. | 15/02 | | |

POWER SUPPLY INPUT

IDENTIFICATION LABEL

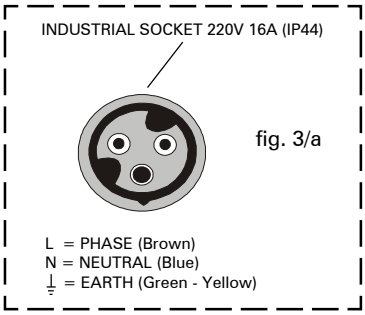


## BEFORE USING THE PROJECTOR

**IMPORTANT** **The unit must be connected to the earth. The inobservance of these instructions automatically makes the guarantee expiring.**

**!** **Carefully read the precautions on page 3 before installing the projector.**

**In particular read the following points:**

1) The connection of the unit to the mains is described in fig. 3/a.
2) Before connecting the projector to the main power supply, make sure that the working voltage and frequency correspond to the values indicated on the label (fig. 3).
   The DOWNTOWN COLORS 1800 is supplied to work at a working voltage of 230V 50Hz; (60Hz on request); 9,5A.
3) Temperature on the unit's external surface:
   - when the thermic balance has been reached Tc = 100°C.
   - Do not lay the connection cable on the unit when it is hot.

It is suggested to connect the unit to the power supply using its own switch, so that it can be put on and off separately.

# MOUNTING AND REPLACING THE LAMP

**IMPORTANT** **In case of replacement of the Lamp or maintenance, never open the unit unless are passed at least 15 minutes after it went off.**

1) Disconnect the projector before replacing the lamp. Wear protective gloves and goggles.
2) Loosen the four screws placed at the sides of the lamp-holder cover, with a 2,5 mm hexagonal key (fig. 4) and take it out.
3) Loosen the the two screws of the reflector, with a 3 mm hexagonal key and remove it (fig. 4) .
4) Open the two lamp locking tongues (fig. 4/a) .
5) Undo the lateral bushes of the lamp and put the two power supply cables in the rheofores, after removing the protective covering (fig. 4/b).
6) Put the lamp in the apposite lamp-holder, making sure that the metallic flange placed on one side of the lamp (fig. 4/a) is inserted in either one of the two slots placed on both sides of the reflector and with the bulb protuberance up. Avoid touching the lamp bulb with the nude hands; in case it accidentally happens, clean the lamp bulb with a dry cloth and alcohol.
7) Put back the two lamp locking tongues.
8) Put back the reflector and the lamp holder cover.

To check the lamp average time efficiently, it is suggested to reset the counter (see **LAMP OPTION**, page 15).

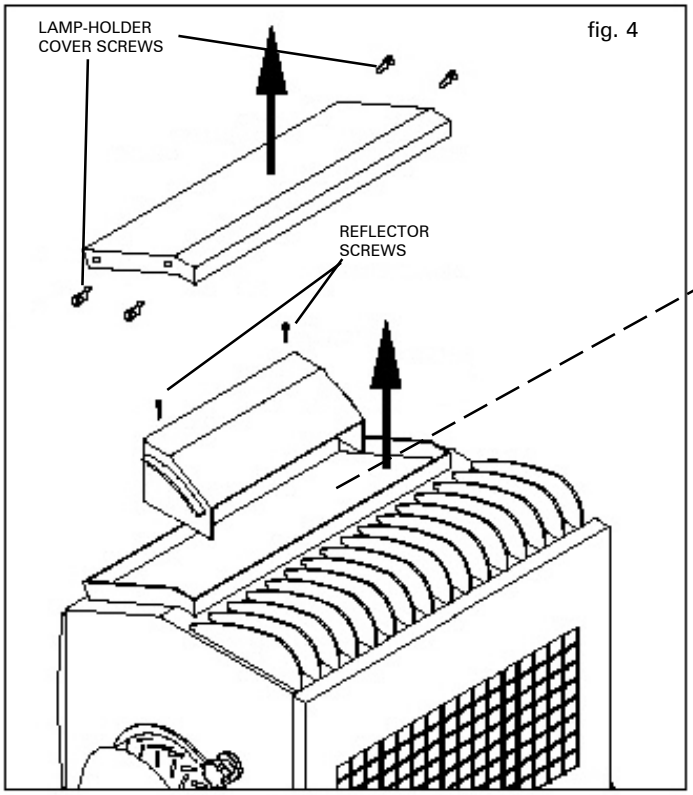

fig. 4

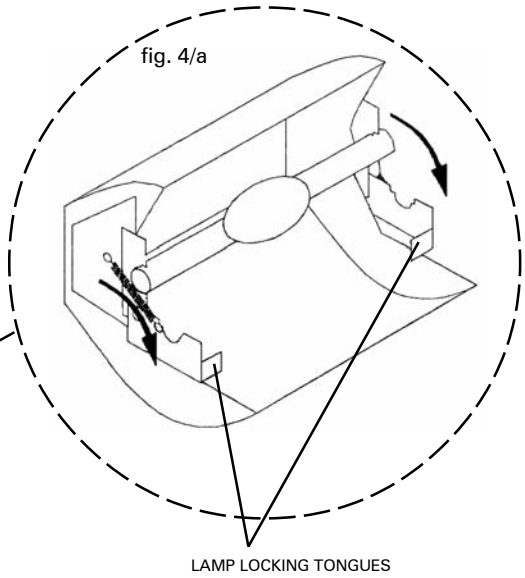

fig. 4/a

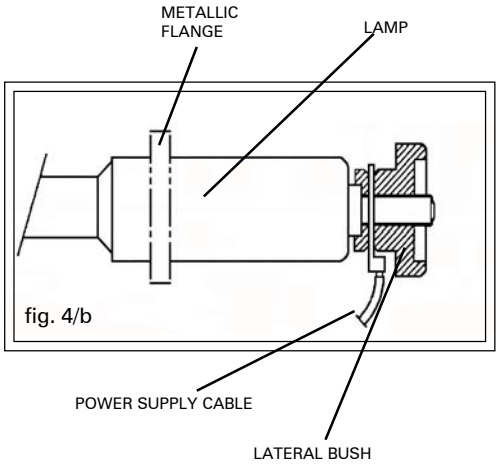

fig. 4/b

**IMPORTANT**

**To avoid performance degradation of the unit and optic damage of the DOWNTOWN COLORS 1800, replace the lamp when it reaches its estimated total lamp-life.**

# DMX SIGNAL CONNECTION

## DMX LINE TERMINAL

### ⚠ IMPORTANT

Do not connect or wrongly connect the DMX line terminal is probably the most common cause of a defective functioning of a DMX line.
The DMX line terminal is a resistance placed between the two data pin 2 and 3 at the end of the line.
The terminal resistance should ideally have the same value of the impedance of the DMX connecting cable.
It is recommended, for all DMX system, to insert the line terminal into the DMX output connector of the last connected projector .

It is suggested to use a DMX line terminal with a resistance value of 100/120 Ohm.
We supply, on request, a DMX line terminal with a resistance value of 120 Ohm.

### EXAMPLES OF CONNECTIONS: DMX CONTROLLER - PROJECTOR

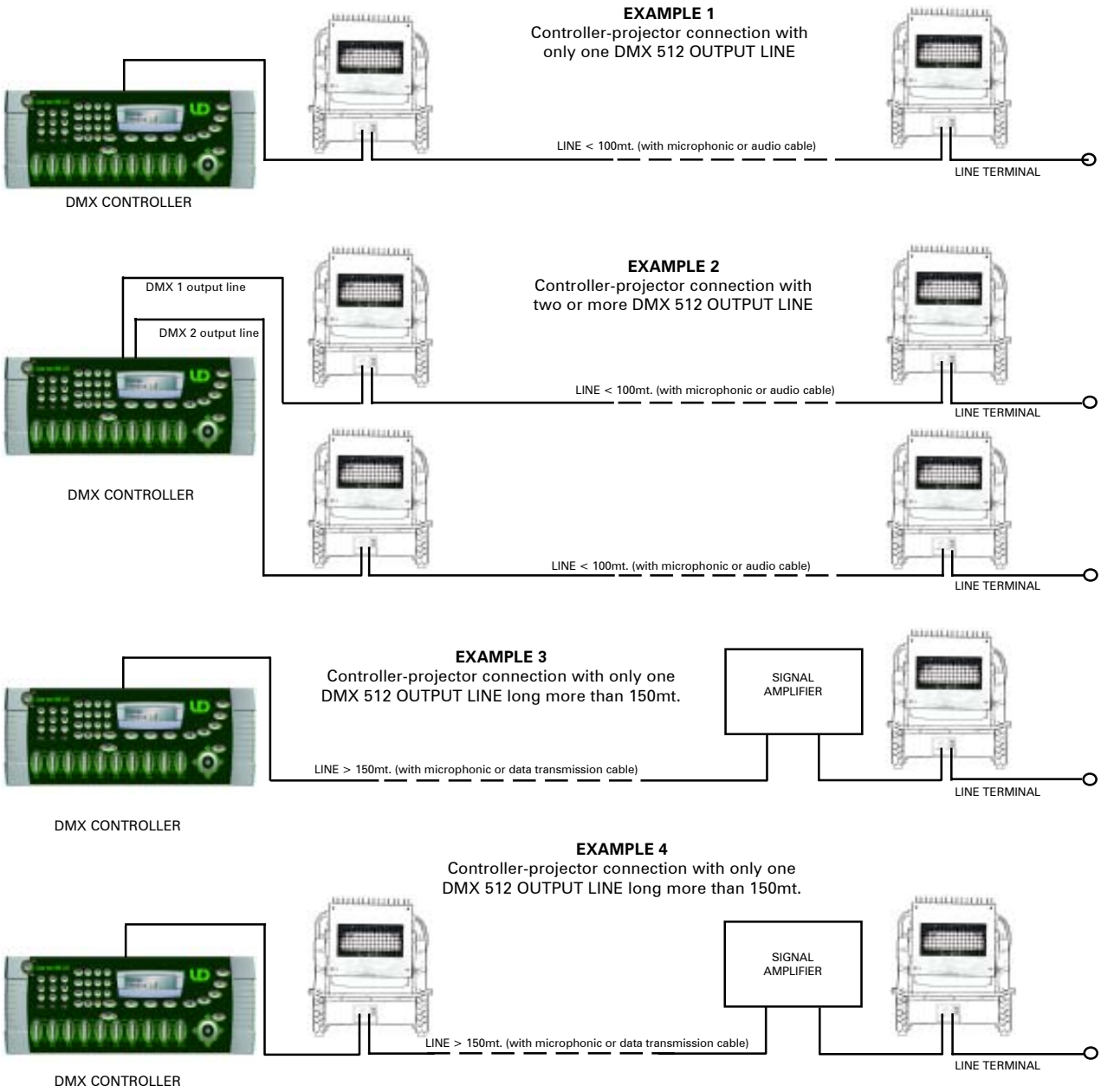

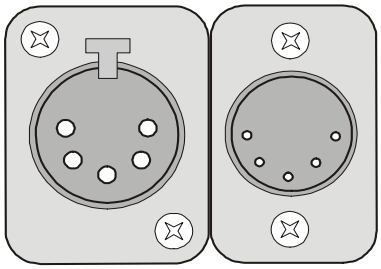

fig. 5

| PIN | WIRE | SIGNAL |
|---|---|---|
| 1 | SHIELD | GROUND/RETURN/OV |
| 2 | INNER CONDUCTOR | DATA COMPLEMENT ( -, INVERTED) |
| 3 | INNER CONDUCTOR | DATA TRUE ( +, NON INVERTED) |
| 4 | | N.C. |
| 5 | | N.C. |

fig. 5/a

## DMX SIGNAL CONNECTION

The DMX signal connection to the DOWNTOWN COLORS 1800 must be done through the input signal connectors XLR 5 pins (fog. 5), placed on the rear panel of the projector (fig. 1/a, page 5).
The nomenclature of the pins of the DMX input connectors is listed in the table reported in fig. 5/a.
To avoid any problem in the transmission of the signal it is recommended to use a cable for very fast data transmissions.
A normal audio cable is suitable only for lines long not more than 100 mt.
The best performances and the maximum stability are obtained using a shielded microphonic cable which section must be of at least 2x0,25mm, or, a data transmission cable.
In case of lines long more than 150/200 mt. it is recommended to use a DMX Repeater Amplifier.

# CONFIGURATION AND CONTROLS

On the DC 1800 control panel (fig. 1/a, page 5 and fig. 6) besides the display there are some led and buttons which allow the projector correct configuration.

### LED

- **"MANUAL CHANNEL CONTROL"** — **on (red)**: the DMX values are being changed; **off**: there is not change;
- **"PROGRAMMING MODE"** — **Not available at the moment.**
- **"AUTOMATIC MODE"** — **on (red)**: Demo or Test is working; **off**: there is not change.
- **"DMX"** — **on (green)**: The DMX signal is on; **off**: The DMX signal is off.

### BUTTONS

There are four buttons which allow the complete programming and management of the projector:

- **MENU/ESC** allows to enter the programming options or exit from them;
- **-** allows to run the selected options back;
- **+** allows to run the selected options forward;
- **ENTER** confirms the options selected.

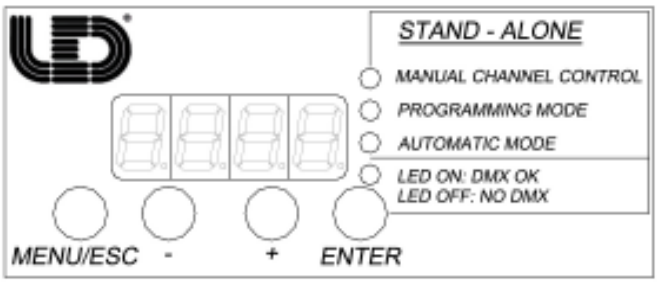


fig. 6

### DISPLAY

It shows the different configuration menu and the options selected.

# PROGRAMMING FUNCTIONS

**CHAN**

**MASt**

**SLAV**

**FVAL**

**USEr**

**brIG**

**rdSP**

**LAMP**

**dIAG**

When the projector is put on the display will show the word **LEd** (factory name), the projector executes a reset routine, after this step the display will show the DMX address which has been given (for default **C 1**).
The DOWNTOWN COLORS 1800 is provided with **WATCHDOG SYSTEM.**

**WATCHDOG SYSTEM:** When the projector is switched on, the electronics perform a reset, this function allows the microprocessor to control the system and register the position of all the motors.
When the lamp strikes and fires up it can cause a certain amount of electrical noise within the projector that can disturb the microprocessor.
The DOWNTOWN COLORS 1800 is provided with an electronic WATCHDOG system that monitors the microprocessor and executes a reset if the funcioning of the microprpcessor has been disturbed.

To enter the menu, press **MENU/ESC** button and press the **+** or **-** buttons as many times as needed to reach the desired option.
The options available are as follows:

- **CHAN** allows to select the DMX address
- **MASt** allows to set up the projector as master (first projector)
- **SLAV** allows to set up the projector as slave (second projector)
- **FVAL** allows to use the projector without any DMX controller
- **USEr** NOT AVAILABLE AT THE MOMENT
- **brIG** allows to change the display light when the menu is not working
- **rdSP** allows to reverse the display visualization
- **LAMP** allows to visualize the lamp working hours
- **dIAG** allows to set up many options for the projector diagnostic programming

To select one of the options above said press the **ENTER** button, the display will show all functions referring to the option selected, press **+** or **-**, press **ENTER** to confirm, press **MENU/ESC** buttons to leave the menu.

**CHAN**
(DMX channel)

To change the DMX address press **ENTER**.
To change the address press **+** or **-** buttons (for a fast advancing keep the button hold) and when the desired option is selected press **ENTER**.
To go back to the options without any change, press **MENU/ESC** button.

**MASt**
(Projector Master)

To set up the projector as Master press **ENTER**.
Move the sub-menu with **+** or **-** buttons and when the desired option is reached press **ENTER**.
It is possible to activate the following functions:

**AUtO:** automatic mode, the Master unit executes its own sequence and sends to the DMX bus the control values for the Slaves (up to three Slave projectors).
Move the sub-menu with **+** or **-** buttons and when the desired option is reached press **ENTER**., the lamp and the AUTOMATIC MODE LED will light.
To get back to the options without change press **MENU/ESC**.
It is possible to activate the following options:

**SLOU:** slow automatic sequence, the display shows **AUtO_SLOU_rUN**.
To stop the execution press **MENU/ESC**.

**FASt:** fast automatic sequence, the display shows **AUtO_FASt_rUN**.
To stop the execution press **MENU/ESC**.

**USEr:** No function.

**MUSI:** No function.

**LINI:** No function.

**SYNC:** No function.

**SLAV**
(Projector Slave)

To set up the projector as Slave press **ENTER**.
Move the sub-menu with **+** or **-** buttons and when the desired option is reached press **ENTER**.
It is possible to activate the following functions:

**SL-1:** first slave program, the DMX LED will light.
Select **YES** using **+** or **-** buttons, press again **ENTER** button to confirm. In this mode the projector will execute the same sequence as the Master unit.
To stop the execution press **MENU/ESC**.

**SL-2:** second slave program, the DMX LED will light.
Select **YES** using **+** or **-** buttons, press again **ENTER** button to confirm. In this mode the projector will execute a sequence stored in its own memory, but the step will be controlled always by the Master unit.
To stop the execution press **MENU/ESC**.

**SL-3:** third slave program, the DMX LED will light.
Select **YES** using **+** or **-** buttons, press again **ENTER** button to confirm. In this mode the projector will execute a second sequence stored in its own memory, but the step will be controlled always by the Master unit.
To stop the execution press **MENU/ESC**.

**!** When the functions **SL-1**, **SL-2**, e **SL-3** are activated, the projector lose the DMX address that has been set up, so that when you leave the menu the display sows **C 25**, **C 49**, **C 73**.
So that it is suggested to take a note of the DMX address before activate one of the above said options.

**SLAV**
(Projector Slave)

**AUtO:** automatic mode, the Slave unit is still controlled by the Master unit, but the sequence it executes is stored in its own memory, so that the Slave unit will wait for a synchronization signal from the Master unit before advancing a step.
Move the sub-menu with **+** or **-** buttons and when the desired option is reached press **ENTER**., the AUTOMATIC MODE LED will light.
To get back to the options without chang press **MENU/ESC**.
It is possible to activate the following functions:

**SLOU:** slow automatic sequence, the display shows **AUtO_SLOU_rUN**.
To stop the execution press **MENU/ESC**.

**FASt:** fast automatic sequence, the display shows **AUtO_FASt_rUN**.
To stop the execution press **MENU/ESC**.

**USEr:** No function.

**tYPE:** this option sets the synchronization between Master and Slave.
The Slave units can be synchronised with the Master in two different way. You can choose to have all units synchronised on the same step, so for example if the Master is on step1, the Slaves will also be on step 1 of whichever sequence they were set to, when the Master is on step 2, the Slaves will also be on step 2 and so on. Or alternatively, you can choose to have only the changing of a step to another synchronised, which means that it does not matter which step any unit is on: when the Master advances a step, the Slaves will also advance a step, which will be not necessarily the same for all of them.
Move the sub-menu with **+** or **-** buttons and when the desired option is reached press **ENTER**., the AUTOMATIC MODE LED will light.
To get back to the options without chang press **MENU/ESC**.
It is possible to activate the following functions:

**CH 1:** The signal on channel 1 is usually zero, when the Master unit advances a step in the selected auto sequence, it sends a level of 255 on channel 1 for a period of 500ms.
When the Slave units receive this signal, they will advance 1 step of their selected auto sequence, no matter which one.

**CH 2:** The DMX signal on channel 2 is slightly different. The Master sends a DMX level which corresponds to the number of the step in the sequence, so for example if the Master is on step10 of its sequence, it will send the DMX level10 on channel 2. So the Slave units set up on this channel will execute the step corresponding to the DMX level received, in this case will execute the step 10 of their sequence.

**EXAMPLE OF CONNECTION BETWEEN MASTER AND SLAVE UNITS OF 4 DOWNTOWN COLORS 1800**

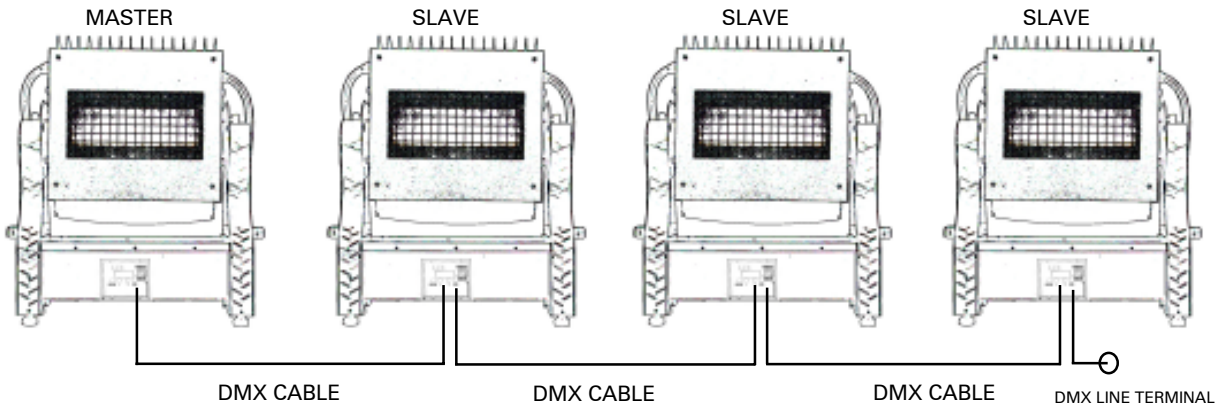

**FVAL**
(Fixed DMX values)

With this option you can set manually the DMX values for each channel and save them (The complete list of DMX values is in APPENDIX "A", page 21).
To set the fixed values press **ENTER**, move the sub-menu with **+** or **-** buttons and when the desired option is reached press **ENTER** to confirm, the MANUAL CHANNEL CONTROL LED will light.
To get back to the options without change press **MENU/ESC**.
It is possible to change the DMX values of the following channels:
**CH 1:** CYAN filter.
**CH 2:** YELLOW filter.
**CH 3:** MAGENTA filter.
**CH 4:** DIMMER / BLACK OUT.
**CH 5:** LAMP control.
To change the fixed values press **ENTER** on the desired channel, the display will show **d 0** (for default), to change the values press **+** or **-** buttons (for a fast advancing keep the button hold) and when the desired option is selected press **ENTER** to confrm. The display will show again the channel on which the change of values has been set. To save these new settings press **+** or **-** buttons until the word **SAVE** is selected, press **ENTER** to confrm, The display will show **NO**, press **+** button to select **YES** and then press **ENTER** to save the new settings.
To get back to the options without change press **MENU/ESC**.
After saving, if you turn the projector off and the MANUAL CHANNEL CONTROL LED will light, the fixed values which have been set will be reloaded automatically when you turn on the projector again. If, on the contrary, after saving, you exit the option FVAL and turn the projector off you have to press ENTER on option FVAL in order to reload the saved fixed values.

It is also possible to have more colors matching the values of the 5 channels, as the following tabel shows:

| OPTIONS OF MATCHING | COLOR OBTAINED |
|---|---|
| CH 5 (lamp at **d255)** + CH 4 (Dimmer at **d255**) + CH 1 (cyan filter at **d255**) + CH 2 (yellow filter at **d255**) | GREEN |
| CH 5 (lamp at **d255)** + CH 4 (Dimmer at **d255**) + CH 1 (cyan filter at **d255**)+ CH 3 (magenta filter at **d255**) | BLUE |
| CH 5 (lamp at **d255)**+ CH 4 (Dimmer at **d255**) + CH 2 (fyellow filter at **d255**) + CH 3 (fmagenta filter at **d255**) | RED |

Moreover, always with the lamp ON and the dimmer opened, lowering or increasing the DMX values of channels CH 1, CH 2 and CH 3, it is possible to obtain more shades of color.

**USEr**

NOT AVAILABLE AT THE MOMENT
To get back to the options without change press **MENU/ESC**.

**brIG**
(Display brightness)

To change the display brightness press **ENTER**.
The display will show **5** (for default), to change the value press **+** or **-** buttons and when the desired option is selected press **ENTER** to confirm.
It is possible to select a value from **0** up to **10**. If you set **0** value the display will be off when the menu is not working.
When you enter the menu the display has the highest brightness and it get back to the value which has been set up when you exit the menu list.
To get back to the options without change press **MENU/ESC**.

**rdSP**
(Reverse display)

To change the display press **ENTER**.
The dispaly will show **NO**, press **+** button to select **YES** and then press **ENTER** to reverse the display.
To get back to the options without change press **MENU/ESC**.
To stop this function you have to select **NO** and press **ENTER**.

**LAMP**
(Lamp timer)

To show the lamp operating life in hours press **ENTER**.
To reset the counter press **ENTER** again (it is suggested to effect this operation everytime the lamp is replaced, ref. page 8), the display shows **CANC**, press again **ENTER**, the display shows **NO**, press **+** to select **YES** and then press **ENTER** to confirm.
The lamp time meter is also cleared every time you restore the factory settings (see option **dIAG**).
To get back to the options without change press **MENU/ESC**.

**dIAG**
(Diagnostic)

To effect diagnostic programming press **ENTER**.
Move the sub-menu with **+** or **-** buttons and when the desired option is reached press **ENTER**.
It is possible to activate the following functions:

**rESE:** press **+** button to select **YES** and then press **ENTER** to confirm (the projector performs a reset). To get back to the options without change press **MENU/ESC**.

**FACt:** press **+** button to select **YES** and then press **ENTER** to confirm (the projector performs a factory settings restore). During the restore time the display shows **VAIt_LEd**. To get back to the options without change press **MENU/ESC**.

**dEMO:** the projector executes a demo sequence in order to check that all functions are working. The AUTOMATIC MODE LED will light and the display shows the word **dEMO_rUN**. To exit the demo mode press **MENU/ESC** button.

**CALb:** press **+** button to select **YES** and then press **ENTER** to confirm (the projector executes the calibration and the motors go to their zero position).
To stop the calibration choose **NO** and press **ENTER**.

**UPGr:** connect the projector to the serial port of a PC via a DMX connector in order to upgrade the software of the unit. Press **+** button to select **YES** and then press **ENTER** to confirm. During the upgrading time the display shows the word **rEC**, the PC tells you when finished.
After the upgrading, turn the projector off, wait for the lamp cooling (if it was lit) and restart the projector. To get back to the options without change press **MENU/ESC**.

**tESt:** the projector executes a test sequence. The AUTOMATIC MODE LED will light and the display shows the word **tESt_rUN**. To exit the test mode press **MENU/ESC**.

**OFFS:** no function.

**VErS:** this option allows to check the version of the electronic boards.
Press **+** or **-** buttons of the sub-menu and when the desired option is selected press **ENTER** to confirm.
It is possible to select the following options:

**MAIN:** to see the projector main board number.

**tAbL:** to see the specific projector control board number.

**SEqU:** to see the stored sequence identification number.

**MOdU:** no function.

# DMX CHANNELS FUNCTIONS (5 CHANNELS)

The DOWNTOWN COLORS 1800 needs 5 channels to check its functions.

The relation between the channels and the functions of the DOWNTOWN COLORS 1800 is described in the following table:

| CHANNEL No. | FUNCTION |
|---|---|
| 1 | CYAN |
| 2 | YELLOW |
| 3 | MAGENTA |
| 4 | DIMMER / BLACK-OUT |
| 5 | LAMP CONTROL |

The complete DMX values list is described in APPENDIX “A”, page 21.

## ADDRESS SELECTION

When you turn the projector on, the display shows the assigned DMX address (for default, **C 1**).
To change the DMX press **ENTER** on the **CHAN** menu.
Use the **-** or **+** buttons to change the DMX value (for a fast advancing keep the button hold) and when the preferred one appears press **ENTER**.

If the “LED DMX” placed on the panel is on, the data transmission from the DMX to the projector is working.

The correct channels for the DMX use of 4 DOWNTOWN COLORS 1800 (5 channels) is described in fig. 7.

fig. 7

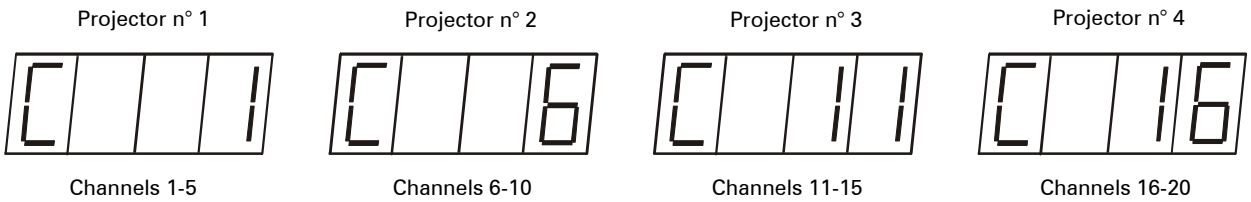

## TABLE 1 - GENERAL PROBLEMS

| PROBLEMS | PROBABLE REASONS | CONTROLS | SUGGESTED SOLUTIONS |
|---|---|---|---|
| **The projector does not start, the fans do not work.** | The power supply is missing. | Measure the power supply tension on the principal connector. | Supply the projector with the right power. |
| | Defective power supply cables and/or connectors. | Check cables and connectors status. | Replace cables and connectors. |
| **The projector works correctly but the lamp does not turn on or intermittently turns off or its light intensity reduces.** | Defective lamp. | Check the lamp status. | Replace the lamp. |
| | The lamp is too hot to turn on. | - | Wait for the lamp cooling. |
| | Too low power supplied. | Measure the power supplied. | Check the power source. |
| | Defective igniter. | Check the igniter status. | Replace the igniter. |
| | The inside temperature is too high. | Check that the thermic protection on the projector is open. | Wait for the cooling of the projector. |
| | The head fans do not work. | Check the fans status. | Replace the fans (if defective). |
| | Obstructed air gratings. | - | Clean the air gratings. |
| **Halo effect around the light beam.** | The lamp bulb is in the wrong position. | Check the lamp bulb position. | Put the lamp in the right position (ref. page 8) |
| **One of the functions of the projector is defective (ex. CYAN filter).** | Wrong CYAN filter movement. | Disconnect the power supply cable and manually check that the CYAN filter movement is flowing and regular. | - |

## TABLE 2 - PROBLEMS TO THE CONNECTION DATA LINK

| PROBLEMS | PROBABLE REASONS | CONTROLS | SUGGESTED SOLUTIONS |
|---|---|---|---|
| **None of the DOWNTOWN COLORS 1800 respond to the controller .** | Wrong configuration. | Make sure that OPTIONS MASt, SLAV, FVAL and dIAG are disabled. | Disable OPTIONS MASt, SLAV, FVAL and dIAG. |
| | DMX controller disconnected from the projectors. | Check if the connection of the DMX controller to the first of the DOWNTOWN COLORS 1800 is correct. | Connect properly the DMX controller. |
| | Interrupted connection cable from the DMX controller to the first DOWNTOWN COLORS 1800. | Use an already tested cable and connect one projector per time, until the interrupted cable is found out. | Replace the DMX cable. |
| | Pin 2 and 3 of the connector of the connecting cable are inverted. | Use an already tested cable and connect one projector per time, until the cable in short is found out. | |
| | Connecting cable in short circuit. | Use an already tested cable and connect one projector per time, until the interrupted cable is found out. | |
| **One or more DOWNTOWN COLORS 1800 do not respond to the controller or do it wrongly.** | Wrong DMX address. | Check if the DMX address of the projector corresponds to the DMX channel of the controller. | Configure properly the DMX address. |
| | One projector has a defective DMX pc board. | Use an already tested cable and exclude one projector per time from the line, until the one with the defective DMX pc board is found out. | Replace the defective DMX pc board. |
| | The DMX line has not a DMX terminator. | Check if on the last projector there is a DMX terminator. | Put a DMX terminator on the last projector (page 9). |

| PROBLEMS | PROBABLE REASONS | CONTROLS | SUGGESTED SOLUTIONS |
|---|---|---|---|
| **In MASTER and SLAVE mode, the projectors are not synchronized.** | The first projector is disconnected from the others DOWNTOWN COLORS 1800. | Check that the connection of the first DOWNTOWN COLORS 1800 is correct. | Connect properly the projectors. |
| | Interrupted connection cable from the DMX controller to the first DOWNTOWN COLORS 1800. | Use an already tested cable and connect one projector per time, until the interrupted cable is found out. | Replace the DMX cable. |
| | Pin 2 and 3 of the connector of the connecting cable are inverted. | Use an already tested cable and connect one projector per time, until the defective cable is found out. | |
| | Connecting cable in short circuit. | Use an already tested cable and connect one projector per time, until the cable in short circuit is found out. | |
| **In MASTER and SLAVE mode, the projectors execute the same programme but do different things.** | OPTION FVAL on. | Check that OPTION FVAL is off. | Disable OPTION FVAL. |

## GENERAL ELECTRICAL DIAGRAM

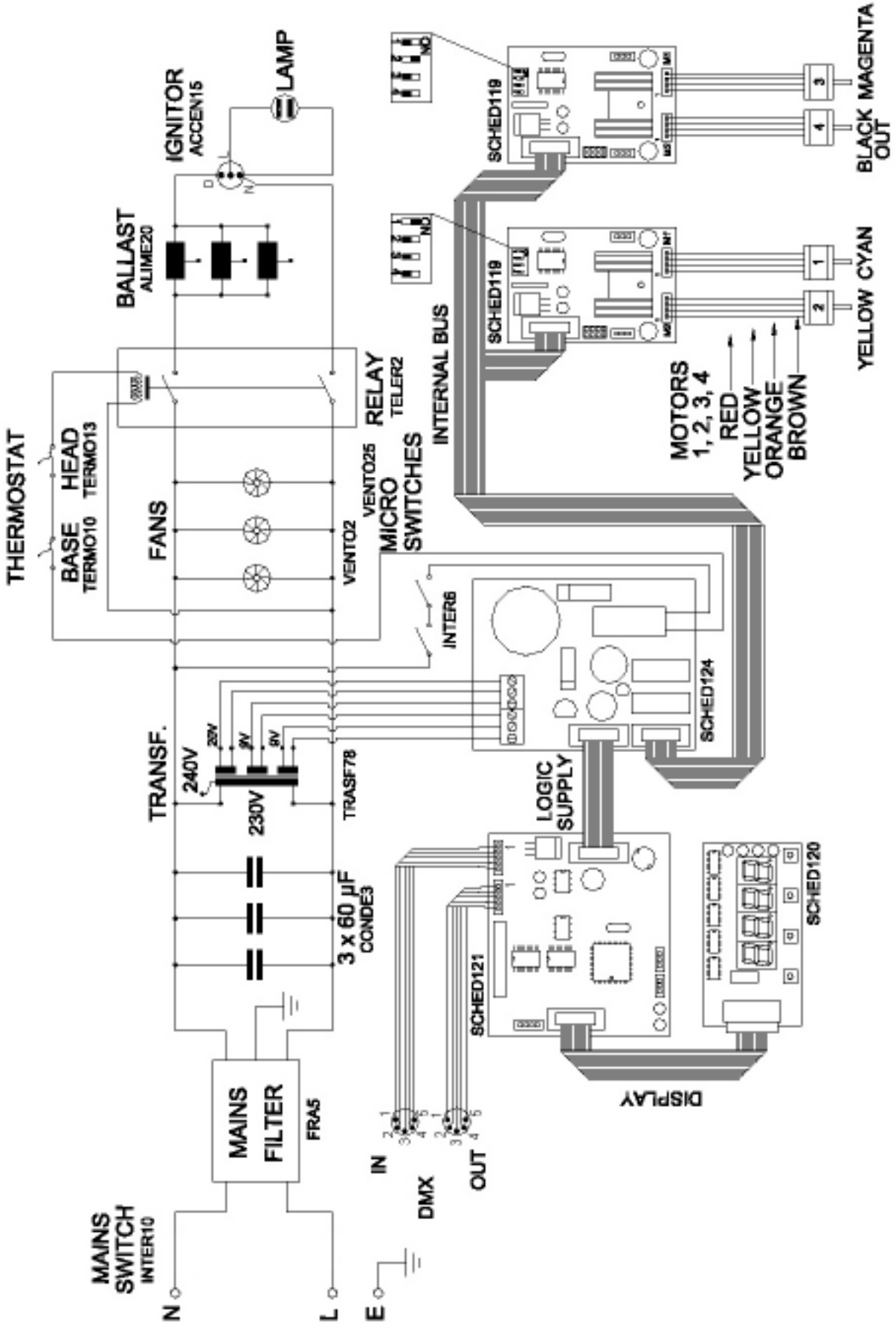

# MAINTENANCE

For operating a correct maintenance of the DOWNTOWN COLORS 1800 follow these instructions:

1) periodically clean the in/out air gratings;

2) periodically clean the lenses and the dichroic filters using antistatic cloths and products.
To do this operation on the diachroic filters room, unhook the 4 hinges placed on both sides of the projector head cover (fig. 1, page 5).

**!** The protective screen and the dichroic filters must be replaced if damaged. Deep slits and cuts greatly reduce their performance.

**!** Do not absolutely use solvents or abrasive products.

# APPENDIX "A"

## 5 CHANNELS CONFIGURATION

The DOWNTOWN COLORS 1800 needs 5 channels to control its functions.

DMX channels functions complete list (ref. page 16).

| DMX CHANNEL | FUNCTION | DESCRIPTION | DECIMAL | PERCENTAGE |
|---|---|---|---|---|
| 1 | **CYAN** | **CYAN FILTER**<br>WHITE<br>CYAN | <br>000..010<br>011..255 | <br>00%..04%<br>05%..100% |
| 2 | **YELLOW** | **YELLOW FILTER**<br>WHITE<br>YELLOW | <br>000..010<br>011..255 | <br>00%..04%<br>05%..100% |
| 3 | **MAGENTA** | **MAGENTA FILTER**<br>WHITE<br>MAGENTA | <br>000..010<br>011..255 | <br>00%..04%<br>05%..100% |
| 4 | **SHUTTER DIMMER** | **SHUTTER DIMMER**<br>CLOSED<br>ADJUSTABLE<br>OPEN | <br>000..010<br>011..240<br>241..255 | <br>00%..04%<br>05%..94%<br>95%..100% |
| 5 | **LAMP CONTROL** | **LAMP**<br>KEEP THE PREVIOUS STATUS<br>LAMP OFF AFTER 10 s.<br>KEEP THE PREVIOUS STATUS<br>LAMP ON | <br>000..024<br>025..063<br>064..191<br>192..255 | <br>00%..09%<br>10%..24%<br>25%..75%<br>76%..100% |

# NOTES

LIGHTING

Rev. 12/2005

Working to make its products always more perfect, LED reserves the possibility to make technical changes during the production. The technical features and the drawings on this manual are not binding for LED and they could be changed at any time without notice. LED it is not responsible for any inconvenience caused by an improper or different use of the unit respect to the one for what it has been made.